IV Crack injection method and hose grouting

Cracks in the concrete are structurally weak points. They shorten the life expectancy of the whole construction, because same is considerably weakend by penetrating water. A flexible or structural crack repair is necessary. For this purpose the crack is pressure grouted with a polyurethane resin using injection ports. The used injection resins are also suitable for use in potable water facilities.

Injection hose grouting at construction joints

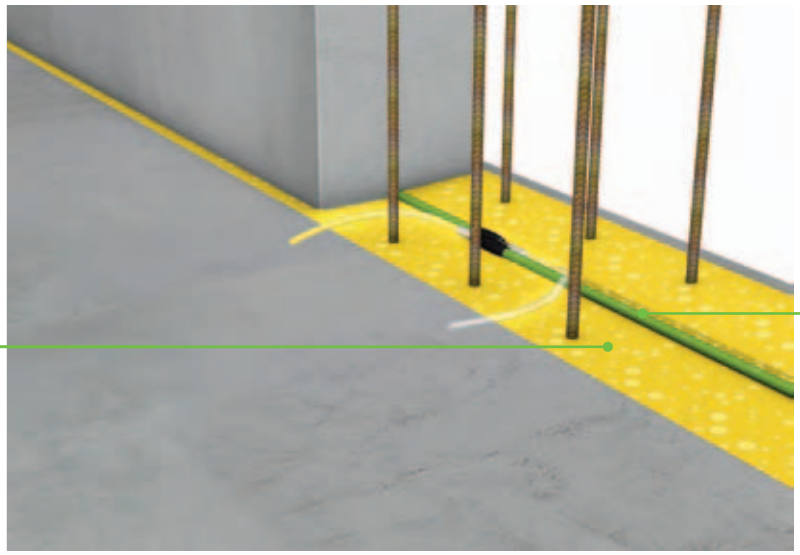

KÖSTER KB-Pur® IN 2
KÖSTER KB-Pur® 2 IN 1
KÖSTER KB-Pur® IN 4
KÖSTER KB-Pur® IN 5

KÖSTER Injection Hose 1
KÖSTER Injection Hose 2

Crack injection by pressure grouting at dry or wet cracks

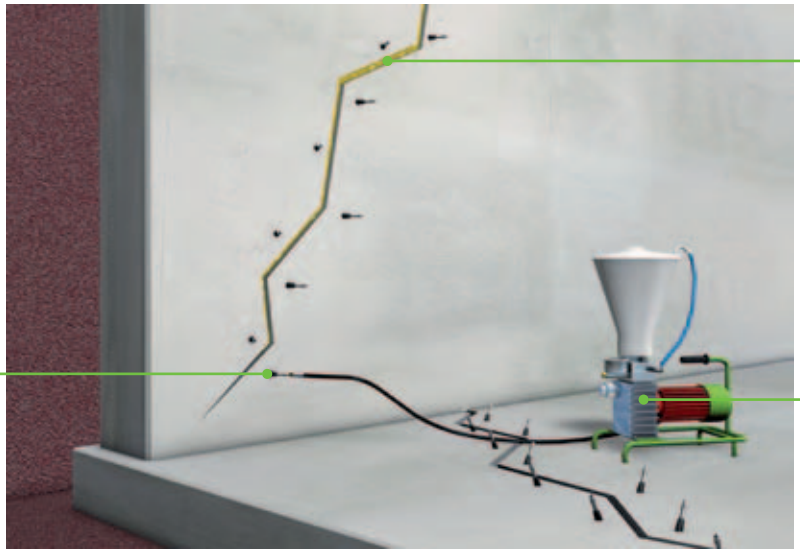

KÖSTER KB-Pur® IN 2
KÖSTER KB-Pur® IN 3
KÖSTER KB-Pur® 2 IN 1
KÖSTER KB-Pur® IN 4
KÖSTER KB-Pur® IN 5
KÖSTER Betomor® Micro Grout

KÖSTER Resin Injection Port
KÖSTER Resin Impact Packer
KÖSTER Impact Packer 18
KÖSTER Impact Packer 12

KÖSTER 1C Injection Pump

Crack injection by pressure grouting at water bearing cracks

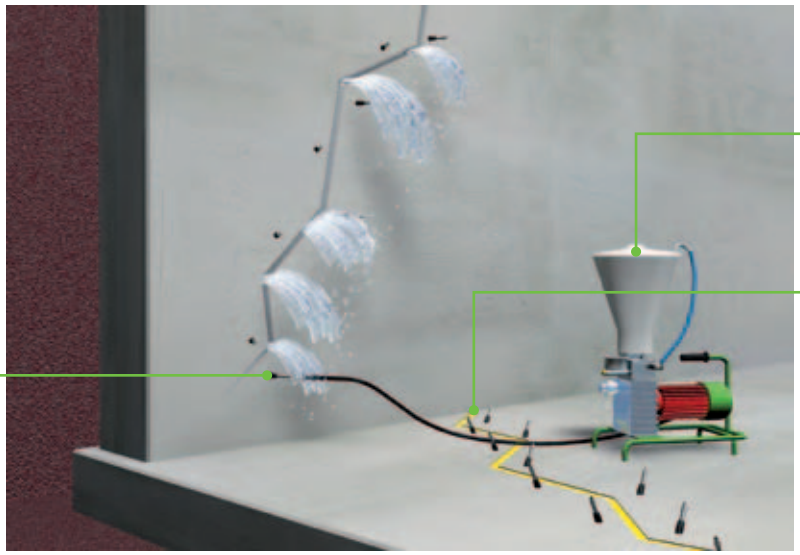

KÖSTER 1C Injection Pump

KÖSTER KB-Pur® IN 1
KÖSTER KB-Pur® 2 IN 1
KÖSTER KB-Pur® 7
Subsequent injection with:
KÖSTER KB-Pur® IN 2
KÖSTER KB-Pur® IN 3
KÖSTER KB-Pur® IN 4
KÖSTER KB-Pur® 2 IN 1
KÖSTER KB-Pur® IN 5

KÖSTER Resin Injection Port
KÖSTER Resin Impact Packer
KÖSTER Impact Packer 18
KÖSTER Impact Packer 12

V Concrete repair

Damages on concrete, e.g. breakouts, need immediate treatment for re-establishing of the original properties. Exposed reinforcing steel needs anti-corrosion treatment. The original structure is restored with mineral products.

Concrete repair at balconies and terraces

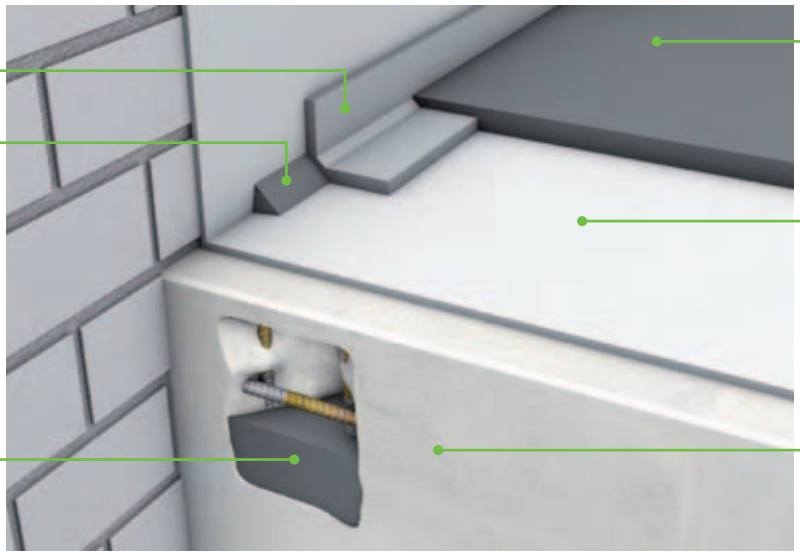

Concrete protection at a clamp silo

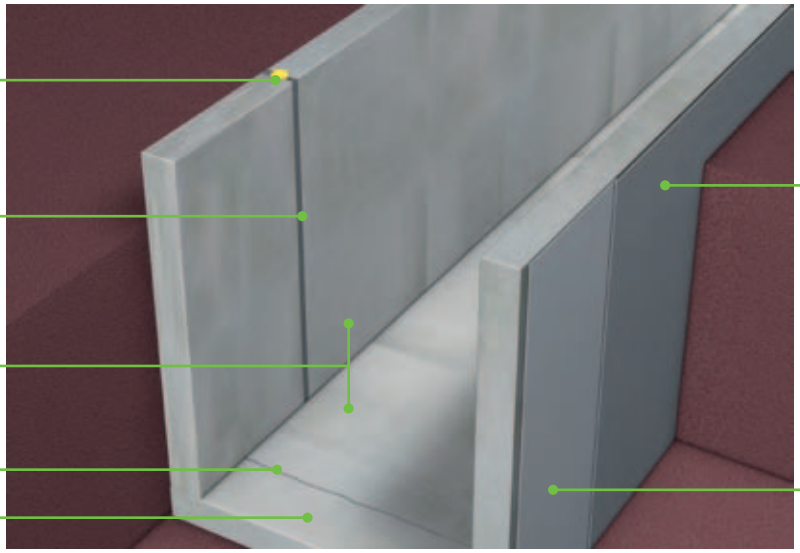

VI Expansion joint sealing

Joints in the construction parts are necessary to accommodate thermal movements in the construction. With a safe joint sealing these joints are sealed permanently flexible, inherently stable and UV resistant. Thus also future movements in the construction will not cause failures.

Expansion joint sealing at mineral and metal surfaces

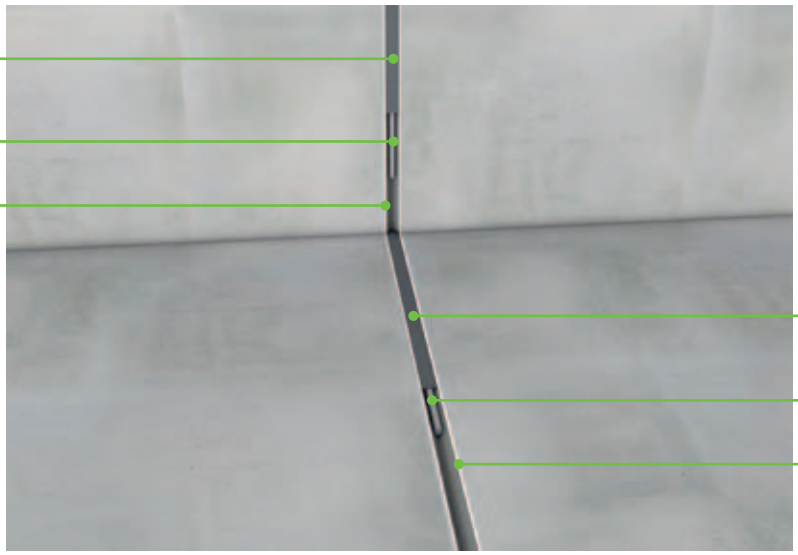
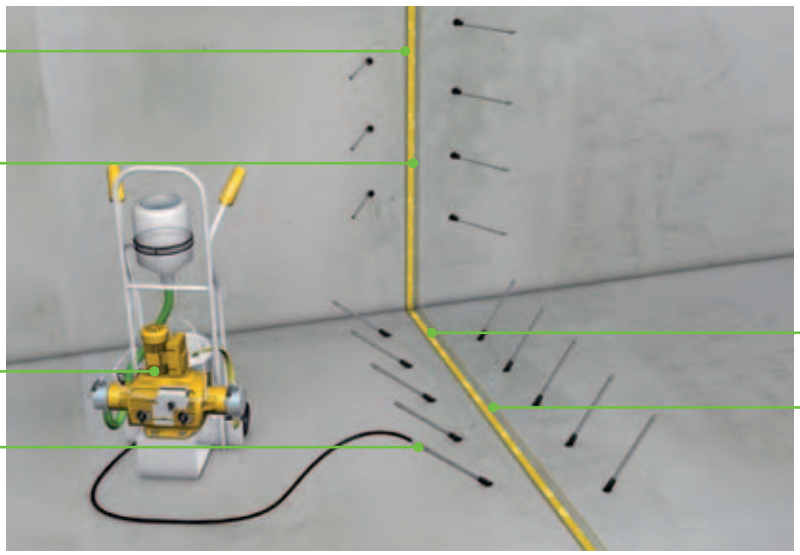
Expansion joint sealing by pressure grouting into dry, damp and water bearing joints